DXN DIMENSIONS – Provided in Inches

SCAN ME >>

Dimensions are for reference only and may change depending on accessories used. For precise dimensions contact MELTRIC Engineering.

Plug

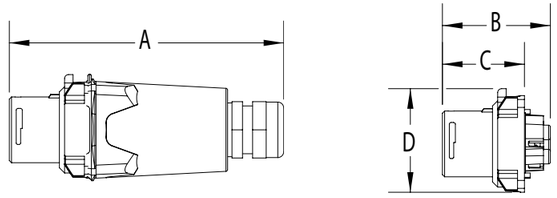

Inlet

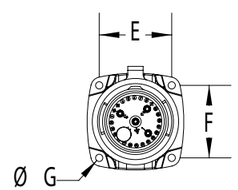

PRODUCT	A	B	C	D	E	F	øG
DXN20	6.36	2.57	1.86	2.40	1.65	1.65	0.18
DXN30	6.47	3.03	1.97	2.83	1.89	1.89	0.19
DXN60	9.67	3.94	2.19	3.02	2.19	2.19	0.20

Connector

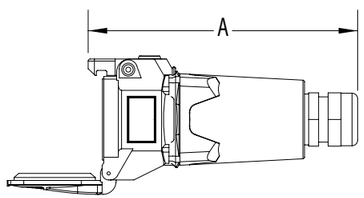

Receptacle

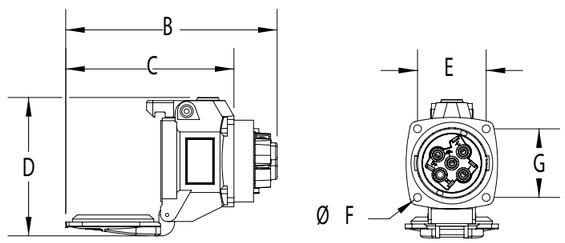

PRODUCT	A	B	C	D	E	øF	G
DXN20	6.22	4.77	4.09	5.28	1.65	0.18	1.65
DXN30	7.17	5.49	4.29	7.05	1.89	0.20	1.89
DXN60	8.31	7.18	5.91	7.68	2.19	0.20	2.19

30° Angle/Receptacle/Plug

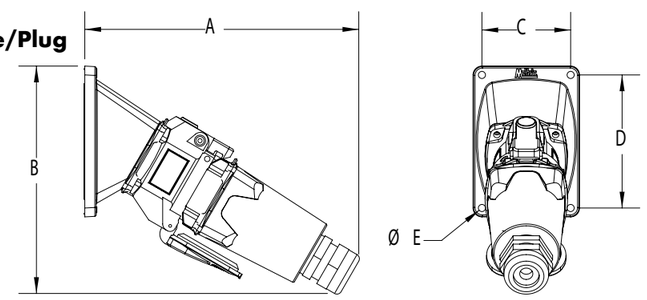

PRODUCT	A	B	C	D	øE
DXN20	7.52	5.91	2.50	3.75	0.20
DXN30	8.07	6.57	2.50	3.75	0.20
DXN60	9.41	7.48	2.50	3.75	0.20

70° Wall Box/Receptacle/Plug

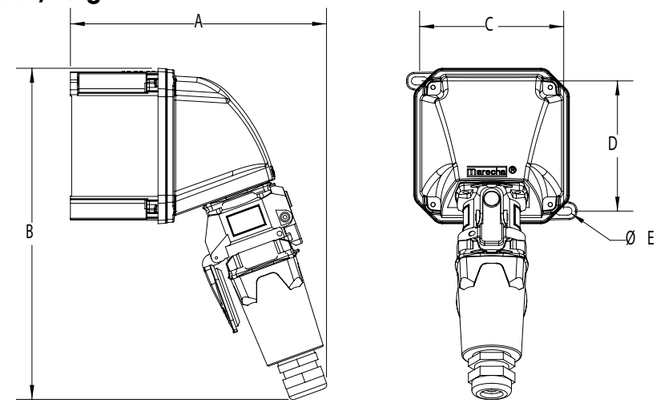

PRODUCT	A	B	C	D	øE
DXN20	8.17	10.57	4.60	4.15	0.26
DXN30	9.25	12.62	4.60	4.15	0.26
DXN60	11.88	13.39	6.17	5.73	0.26

Connector/Plug

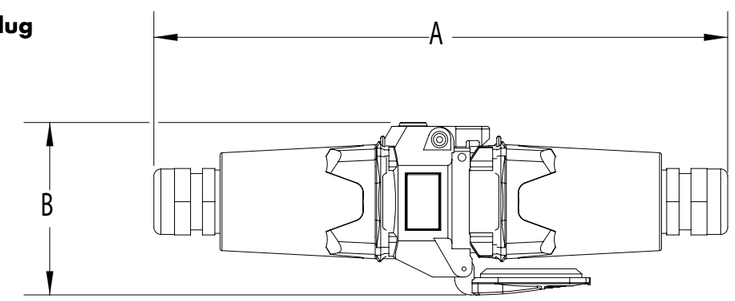

PRODUCT	A	B
DXN20	11.10	3.33
DXN30	12.59	4.08
DXN60	13.95	4.65